ENGINE
END 864

THERMODYNE DIESEL

Operations requiring a minimum weight engine with high horsepower are reliably met by the Mack 255 HP Thermodyne diesel engine, END 864. The features, experience and production skill which have made Mack diesels world famous are a part of this easy-to-service V-8 diesel.

Excellent fuel economy, dependability and low maintenance costs are profit making features of this naturally aspirated, four-stroke cycle engine. Governed at 2300 RPM, it has an 864 cubic inch displacement and develops a torque of 639 pound-feet at 1700 RPM.

Of the famous open-chamber, direct-injection type, the combustion system achieves outstanding results by a new combination of features of established merit. Among these is the deep-breathing, high-velocity air swirl.

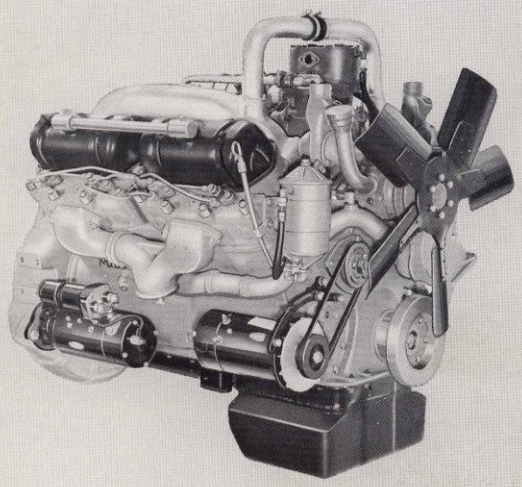

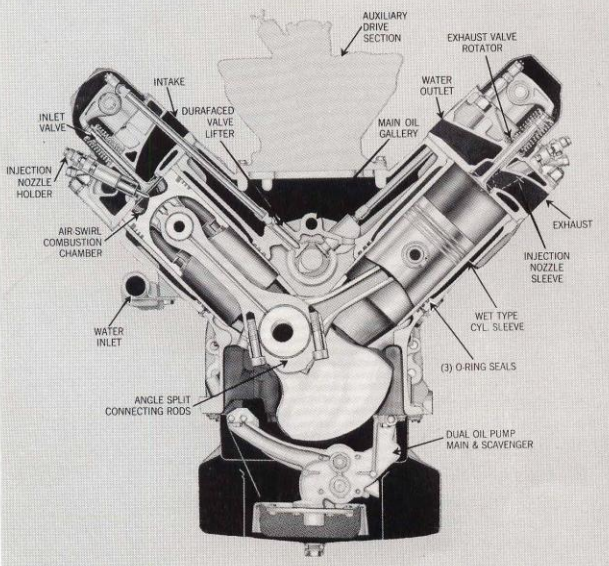

This, combined with an improved single plunger type fuel injection system, operating at moderate pressure, produces high thermal efficiency and therefore sustained economy through a broad range of useful speeds. Smooth and flexible operation results from the automatically controlled injection timing device for best results at all engine speeds. In addition, it assures quick starting, even at low temperature.

Long life and low maintenance are further assured by Mack diesel features such as full-length water jackets, plus directed water flow, to promote uniform cylinder temperature and efficient lubrication; angle-split connecting rods to permit largest bearings and removal of rods through cylinder bores; Durafaced valve lifters faced with tungsten carbide to render them relatively immune to wear and assure long cam and lifter life; "Everlasting" timing gears; engine lubrication oil is water cooled and thoroughly cleaned every cycle by dual full-flow by-pass filtration to prolong engine and oil life.

ENGINE MODEL END 864

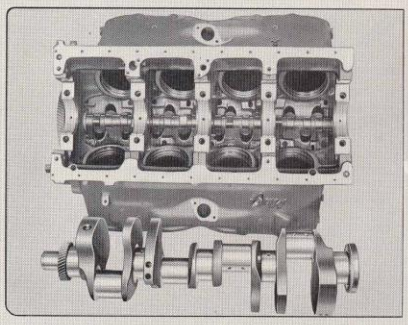

The accurate cylinder block casting is a rigid structure with five main and camshaft bearings supported in husky bulkheads. Mack crankshaft is integrally balance-compensated for V8 operation. The skew drilled connecting rod lube oil passages are located for ideal oil feed relation to the bearing.

Connecting rods are balanced to a single weight classification to eliminate need for matching in sets. The rugged Mack tongue and groove lock with precision cap screws maintains accurate bearing alignment and shape. All cap screws face downward for easy access.

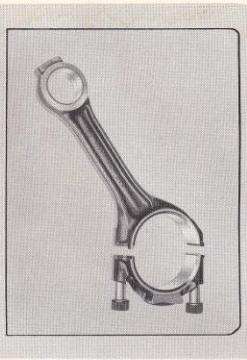

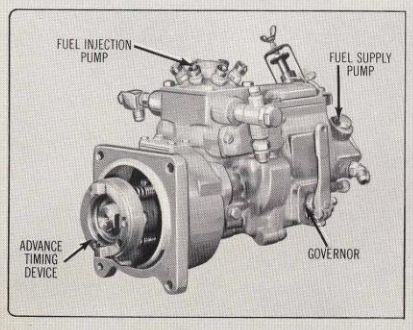

Advance timing unit, single plunger type fuel injection pump, governor and fuel supply pump sealed assembly is driven from the timing gears. The flange mounted assembly is independent of engine valve mechanism which makes for ease of maintenance. Retardation is provided in coasting by complete fuel shut-off. Exclusive automatic injection timing device assures exceptionally smooth running and easy starting.

Mack's exclusive Everlasting Timing Gears — end-grain drop-forgings for strength, case-hardened for durability and generator-ground for quietness.

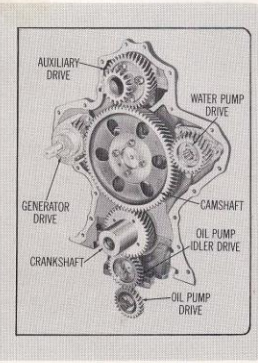

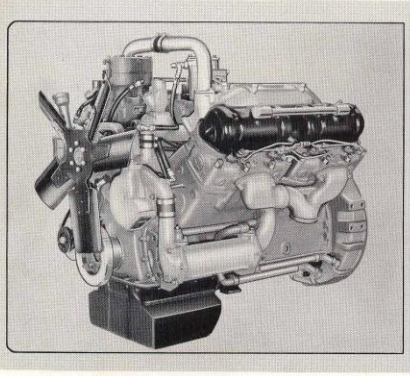

Large aluminum inlet manifolds assure high breathing for utmost volumetric efficiency. Exhaust manifolds are designed to permit rapid expulsion of the hot gases. New pressed steel pan design assures lubrication even on the severest grades. The oil pump located in the oil sump affords quick engine lubrication upon starting.

Cylinder head raised, showing large inlet valves, exhaust valves (having positive type rotators), and fuel injector nozzle positioned for peak engine efficiency and ease of maintenance. Combustion chamber is centered in the high-strength aluminum alloy piston crown.

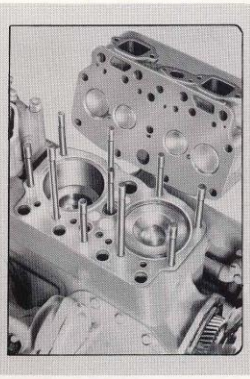

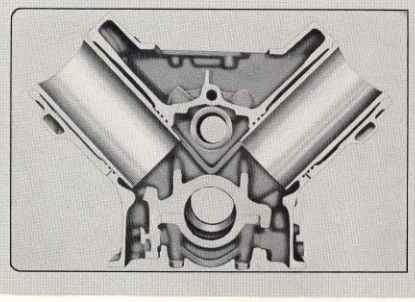

Coolant distribution is exceptionally uniform with directed feed to the points where combustion heat effects are greater. Three cylinder sleeve o-ring seals are used. Recessed into the block rather than the sleeve, they provide longer seal life and a weight-saving sleeve design.

Ease of accessory accessibility for service is planned by the clean and compact arrangement of accessories. Air intake crossover tube equalizes air charge to cylinders for economical and smokeless operation.

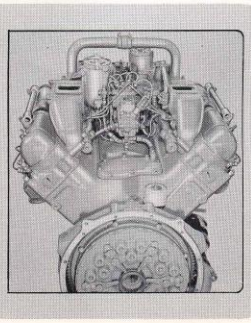

ENGINE MODEL END 864

Make	Mack
Type	Thermodyne Diesel, naturally aspirated, V-8, 4-stroke, open chamber, direct injection
Number of cylinders	Eight
Bore and stroke	5" x 5½"
Piston displacement	864 cu. in.
Compression ratio	16.18
Brake horsepower @ 2300 r.p.m. (gov.)	255
Max. torque @ 1700 r.p.m.	639 lb.-ft.
A.M.A. horsepower	80.0
Cylinder block	Chromium-nickel-copper alloy iron
Cylinder sleeves	Special alloy iron
Type	Wet
Cylinder heads cast in	Two's, Two heads per bank
Pistons, material	Aluminum alloy
Piston rings, compression	Three (top ring chrome plated)
Oil control	One
Wristpin, type	Full-floating
Diameter	1-7/8"
Retention	Snap rings
Connecting rods, type	Drop-forged I-beam
Cap angle	35°
Length, center to center	10-1/2"
Crankshaft	Integral counterweights
Material	Medium carbon steel, Tocco hardened journals
Weight	233 lbs.
Vibration damper	Viscous type
Main bearings, material	Copper-lead, steel back with babbitt overlay
Number and diameter	Five, 4"
Total length	7-5/64"
Connecting rod bearings,	
Material	Copper-lead, steel back with babbitt overlay
Diameter & length	3-1/2" x 1-33/64", two connecting rods per crankpin
Camshaft, bearings	Five
Timing drive	Mild carbon steel, case-hardened, generator ground helical gears
Valve-lifter, type	Mushroom, Durafaced (Tungsten-Carbide)
Inlet and exhaust valve seats	Permanently fitted inserts of high-alloy, heat-resistant metal
Valves, location	Overhead
Exhaust	Hard faced, with positive type rotators
Clear dia. of ports, Inlet	2-3/64"
Exhaust	1-11/16"
Lift, Inlet & Exhaust	9/16"
Material, Inlet	Chromium-silicon steel, Stellite faced
Exhaust	Stabl-ite (face, Stellite; head and upper end of stem, chromium-nickel-nitrogen-austenitic steel; lower end of stem, nickel - chromium - molybdenum steel)
Cylinder numbering	1-2-3-4 right bank 5-6-7-8 left bank
Firing order	1-5-4-8-6-3-7-2
Fuel injection pump, make	American Bosch, PSJ
Type	Single plunger
Drive	Gear, driven at engine speed
Timing	Variable
Transfer pump, type	Gear, integral with injection pump
Nozzles, type	Four-hole spray
Fuel filters	Primary and secondary
Governor, make	American Bosch
Type	Mechanical
Manifolds, Inlet	One each cylinder bank with cross-over tube
Exhaust	One (2 section) per bank
Air cleaner	Donaldson, oil bath
Air compressor (gear driven)	Tu-Flo 500 (12 cu. ft.)
Cooling:	
Water delivery to cylinder block	Through gallery cored in block
To cylinder head	From cylinder block through ports directed toward exhaust valve seats
Water conditioner	Perry
Thermostat, to open	170°, two
Lubrication, oil filter	
Make and model	W.G.B., WB-5
Type and capacity	Combination Full Flow/By-Pass, 12 quarts
Lubrication, oil cooler	Tube and shell type
Oil Capacity, including filter and oil cooler	32 quarts (approx.)

Illustrations are not necessarily a representation of standard specifications with respect to all details.

END 864 • 255 HORSEPOWER

SAE DIESEL ENGINE TEST CODE

Curve Sheet DD-4

Test No.

Eng. Mfr. MACK Model END 864 Serial No. Date

No. Cyl. 8 Bore 5 Stroke 5 1/2 Displacement 864 CU. IN.

Fuel DIESEL For Details see Mech. Inform. Sheet END 864-A and Log Sheet T-14C-9

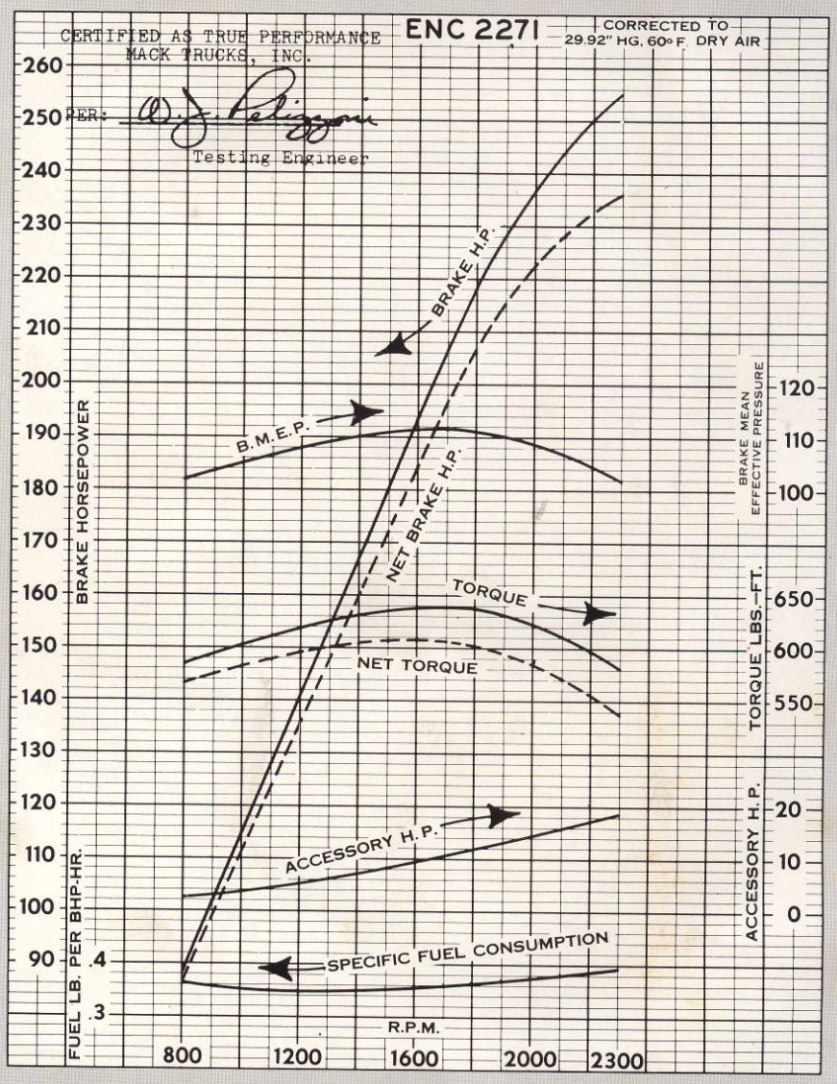

MACK TRUCKS, INC. • Montvale, N. J.

PRINTED IN U.S.A.